Journal of Neurochemistry
Lippincott Williams & Wilkins, Inc., Philadelphia
© 1999 International Society for Neurochemistry

Genetic Targeting: The Serotonin *N*-Acetyltransferase Promoter Imparts Circadian Expression Selectively in the Pineal Gland and Retina of Transgenic Rats

Zoe Burke, Tim Wells, David Carter, *David Klein, and †Ruben Baler

*School of Bioscience, University of Wales, Cardiff, Wales; and *Section on Neuroendocrinology, Laboratory of Developmental Neurobiology, National Institute of Child Health and Human Development, and †Unit on Temporal Gene Expression, Laboratory of Cellular and Molecular Regulation, National Institute of Mental Health, National Institutes of Health, Bethesda, Maryland, U.S.A.*

Abstract: The arylalkylamine *N*-acetyltransferase (AA-NAT) gene is strongly expressed in the rat primarily in the pineal gland; low levels of expression are also found in the retina. AA-NAT catalyzes the key regulatory step controlling rhythmic melatonin output: the acetylation of serotonin. In the rat, the AA-NAT gene is expressed at night. This is controlled partly by cyclic AMP (cAMP) acting through a composite cAMP-responsive element–CCAAT site located upstream of the transcription start point. In the present study, we have extended our previous in vitro findings and found that additional elements in the 5′ flanking region and first intron play an important role in the regulation of the AA-NAT gene. This led us to test the influence of an AA-NAT 5′ flanking segment on the expression of the bacterial chloramphenicol acetyltransferase gene in a rat transgenic model. The results of this study clearly demonstrate that the segment of the AA-NAT gene that encompasses the minimal promoter and the first intron is able to confer the highly specific pineal/retinal and time-of-day patterns of AA-NAT gene expression. This advance also provides a tool that selectively targets genetic expression to pinealocytes and retinal photoreceptors, providing new experimental opportunities to probe gene expression in these tissues. **Key Words:** Pineal gland—Rat arylalkylamine *N*-acetyltransferase promoter—Circadian rhythm—Retina.
J. Neurochem. **73,** 1343–1349 (1999).

Rhythmic production of melatonin (Evered and Clark, 1985) in the vertebrate pineal gland reflects rhythmic changes in the activity of serotonin *N*-acetyltransferase (arylalkylamine *N*-acetyltransferase, EC 2.3.1.87; AA-NAT; Klein, 1985), the penultimate enzyme in the melatonin biosynthetic pathway. Elevated levels of AA-NAT activity and melatonin production occur at night. In the rat, the nocturnal increase in AA-NAT activity is preceded by increased expression of the AA-NAT gene, which is initiated by the release of norepinephrine (NE) from sympathetic nerve terminals within the gland. This rhythmic release of NE is controlled by the endogenous circadian oscillator in the suprachiasmatic nucleus (Klein and Moore, 1979).

NE acts through adrenergic receptors to increase cyclic AMP (cAMP; Parfitt et al., 1976; Vanecek et al., 1985) and intracellular calcium (Sugden et al., 1986, 1987). These events result in the phosphorylation of the cAMP-responsive element (CRE) binding protein(s) (Roseboom and Klein, 1995), leading to transcriptional activation of the AA-NAT gene promoter through at least one well characterized composite CRE-CCAAT site (Baler et al., 1997). The resulting ~100-fold increase in AA-NAT mRNA is required for the ~100-fold increase in AA-NAT activity to occur (Borjigin et al., 1995; Coon et al., 1995; Roseboom et al., 1996).

Expression of the AA-NAT gene in the rat occurs primarily in the pineal gland; lower levels are detectable in the retina, and expression is undetectable or at the limits of detection in other tissues (Borjigin et al., 1995; Roseboom et al., 1996). Consequently, the AA-NAT gene provides an excellent model with which to study the molecular basis of both tissue-specific expression and NE → cAMP-dependent gene expression.

In addition to the clear evidence that a functional CRE-CCAAT complex is present in the minimal AA-NAT promoter, preliminary evidence suggests that sequences downstream of the transcription start point also

Received May 18, 1999; revised manuscript received June 16, 1999; accepted June 17, 1999.

Address correspondence and reprint requests to Dr. R. Baler at National Institutes of Health, Bldg. 36, Rm. 2A-09, Bethesda, MD 20892, U.S.A.

Abbreviations used: AA-NAT, arylalkylamine *N*-acetyltransferase; APP, alternating purine–pyrimidine; Bt_2cAMP, dibutyryl cyclic AMP; cAMP, cyclic AMP; CAT, chloramphenicol acetyltransferase; CRE, cAMP-responsive element; DMEM, Dulbecco's modified Eagle's medium; G3PDH, glyceraldehyde-3-phosphate dehydrogenase; ICER, inducible cAMP early repressor; NE, norepinephrine; PCE, photoreceptor conserved element; PIRE/CRX, pineal regulatory element/cone–rod homeobox; ZT, Zeitgeber time.

influence gene expression (Baler et al., 1997). We have pursued this in the current report and have found that the first AA-NAT intron contains a positive-acting domain(s) required to sustain a maximal and specific response in pinealocytes. With this information, it was possible to generate several lines of transgenic rats that express bacterial chloramphenicol acetyltransferase (CAT) in a tissue-specific and time-of-day pattern identical to that of AA-NAT.

MATERIALS AND METHODS

DNA vector constructions

The isolation of the rat AA-NAT 5′ flanking region has been described (Baler et al., 1997). The intron 1-containing reporter construct contains all genomic sequences between position −218 and +1,786 upstream of the firefly luciferase translation start point. Throughout this work, nucleotide positions are relative to the start of transcription, with translation starting at +1,787 (position +175 on the mature RNA). Thus, −218 contains the intron 1 (1,612 bp) from position +114 through +1,725. Intronic deletion −218N1/LUC (which lacks >90% of intron 1) was generated by digestion of −218/LUC with *Nsi*I (positions 181 through 1,679). To generate the CRE-deleted construct (−218AP/LUC), −218/LUC was double-digested with *Asp*I (990) and *Pac*I (1,015).

Tissue culture, pineal dissociation, and adenovirus-mediated transfection

Dissociated rat pinealocytes (5×10^6 cells) were prepared as described previously (Baler et al., 1997). In brief, 50 pineal glands (Taconic Farms, Germantown, NY, U.S.A.) were rinsed and trypsinized in 5 ml of Dulbecco's modified Eagle's medium (DMEM) containing 0.2% trypsin and 40 μg/ml DNase I (Boehringer-Mannheim, Indianapolis, IN, U.S.A.) for 50 min (37°C, 95% O_2/5% CO_2). Glands were then triturated in 3 ml of DMEM supplemented with 20 μg/ml DNase I (Boehringer-Mannheim), and the preparation was sieved to remove clumps. The resulting pinealocytes were plated in two wells of a six-well plate (Costar, Cambridge, MA, U.S.A.) in 2 ml of DMEM supplemented with 10% fetal calf serum, 2 m*M* glutamine, 100 U/ml penicillin, and 100 μg/ml streptomycin ($DMEM^+$) to pan out adherent cells. The pinealocyte-enriched population in suspension after 10 h was harvested, collected by centrifugation, and resuspended in serum-free OptiMEM (Life Technologies, Gaithersburg, MD, U.S.A.) at $\sim 0.1 \times 10^6$ cells/ml; 0.4-ml aliquots were transferred to individual wells in a 24-well plate (Costar). Transfections were performed the following day by overlaying the cells with a LipofectAmine (Life Technologies)/DNA precipitate (3 μl and 2 μg, respectively) for 1 h before adding $\sim 2 \times 10^8$ adenovirus particles to enhance transfection efficiency (Yoshimura et al., 1993). Twenty-four hours later, a 0.5-ml sample of $DMEM^+$ was added. Where indicated, dibutyryl cAMP (Bt_2cAMP) was added to the cultures at this point. Luciferase activity was measured 24 h later (Luciferase Assay System; Promega, Madison, WI, U.S.A.) following the manufacturer's recommendations. Transfection efficiency was estimated at ∼5% by in situ 5-bromo-4-chloro-3-indoyl-β-D-galactopyranoside staining of paraformaldehyde-fixed pinealocytes that had been transfected with a Rous sarcoma virus–β-galactosidase reporter vector (Promega). Results of transient transfection assays are representative of 10 independent experiments. Statistical analysis was performed on three independent experiments by a paired Student *t* test (Goulden, 1956).

Rat transgenic studies

Transgenic rats were generated as described (Murphy and Carter, 1993). In brief, a restriction fragment carrying the appropriate AA-NAT 5′ flanking region in front of the bacterial CAT coding region was excised from the −218/CAT (intron +) or −218N1/CAT (intron −) vectors by digestion with *Hin*dIII and *Bam*HI and purified for microinjection into rat embryos. Transgenic offspring were identified by probing Southern blot filters of *Nco*I-digested genomic DNA with a 1.6-kb *Xba*I/*Bam*HI fragment of pCATBasic (Promega). A molecular weight standard for Southern blots was prepared by *Nco*I digestion of the transgene fragment, which yields a 1,081-bp CAT/SV40 fragment and a 3,606-bp −218/CAT fragment (see Fig. 2A). Transgene copy number was determined by probing similar filters with a 500-bp *Hin*dIII/*Xba*I fragment of the NAT promoter sequence (−267/CAT; Baler et al., 1997) and comparing autoradiographic signals of the endogenous NAT gene using ImageMaster software (Pharmacia, Piscataway, NJ, U.S.A.). Copy numbers of the transgenic lines AP2, AP6, AP9, CP92, CP70, and CP88 were estimated at 2, 80, 170, 1, 43, and 57, respectively.

Transgene expression was determined by duplicate northern blots (Ang et al., 1993) using the CAT-specific probe for signal detection. For RT-PCR (Knuchel et al., 1994), 1 μg of total RNA was reversed-transcribed in a 20-μl reaction and 1 or 2 μl of cDNA was used. PCR reactions were run at cycle numbers of 30 (CAT) or 28 [glyceraldehyde-3-phosphate dehydrogenase (G3PDH)]. These fall within the linear range of amplification. The PCR reaction is not truly quantitative. However, the observed differences are large and were confirmed in a second experiment. Therefore, it is not unreasonable to regard this as a semiquantitative analysis. To control for equal loading, levels of CAT mRNA were compared against levels of G3PDH mRNA (Dukas et al., 1993) using an RT-PCR-amplified rat G3PDH fragment (data not shown). In situ hybridization histochemistry was performed as described (Ang et al., 1993) using a ^{35}S-labeled CAT-specific 58-mer oligonucleotide (bases 205–262).

Light/dark paradigms

Animals were housed on a 12:12-h light/dark (lights on at 7 a.m.) schedule for 2 weeks before experiments were carried out. For monitoring of circadian expression of endogenous AA-NAT and transgenic CAT reporter genes, rats were shifted to a constant darkness environment on the first day of the experiment. Samples were collected then on the fourth day starting at Zeitgeber time (ZT) 5 (circadian time 12). Light blockade of adrenergic stimulation was carried out with animals maintained on the standard 12:12-h light/dark cycle. Half of the animals were killed in the dark at midnight (12 a.m.), and the other half were exposed to light throughout the last subjective night cycle and killed at subjective midnight. For the isoproterenol experiment, animals on the standard light/dark cycle were injected at midday (12 p.m.) with either saline or isoproterenol or left untreated and were killed 3 h later.

Animal care and protocols

All experiments were done in accordance with the Public Health Service Policy on Humane Care and Use of Laboratory Animals, the *Guide for the Care and Use of Laboratory Animals*, and the Animal Welfare Act regulations, following experimental protocols that were approved by the Animal Care and Use Committee and met the National Institutes of Health guidelines. Procedures that might have caused more than momentary or slight pain or distress were performed after sedation.

A

```
   +1   ACAGCTTCCT CGCAGGCAGG AGTCTCAGGT TCTCCTCATT CCTGCACCCA GTAACAGCCC CAGTGTGACC AGCTCTGTGG
   81   TGGGGACACC TGGACTCCTT CTTACAGGTT CTGGTAAGTG GACCCCATCC CTGGCTCTAT GTATGTATGT ATGTATGTAT
  161   GTATGTATGT ATGTATGTAT GTGTGTATGC ATGTATTTGT GTATATATGT ATGTGTATGC ACATGTGTAT GTGTGCATGT
  241   TTATATGTGT ATGTTAGTGT ATATATGTAT GTGTGTATAT GTGTTTATGT ATGTGTGTGT GTGTGTGTGT GTGTGTGTGT
  321   GAGTGTGAGT GGAGGCCAGA GGTTAGCTTT GGGTGTCATT CTCTGGGAAC TGCAGGAACT GTCTACTTCA TCTCTTGGGG
  401   CAAGGTCTCT CACCGGTCTG AAGCTCACTA AGTGGGCTGG GTTGAGCTAG GGGGGCCAGC AAGTCCCAGG GATTTGCCCA
  481   ACCCTGTGTC TCAGGTGCCA GGACACAGAT GCTGGGTGAT GGGAGCTGGT TTTTTCACGT TCTGAGGCTC CTGCTTAGGT
  561   CCTTGTGCTT GAGCCATCGC CATCGCCCAT TTAAAAAGAT TCCTTTCCAG TCACTTTATG TGCACGTGCG GTGCACACAT
  641   GTGGAAGCCA GAGGACTGCT GTGGGAGTCT GTTCTCTCCT CTTATCATGT GGGTCCCTGG GATCAAACTC AGGTTCTCAG
  721   GCTTGGTCAA AGTCGCTTTA CTTGCTGAGC GGCCTCACCT GAACTCCTCA GCCCCTTTTG AAGGCTGAGG GATGGAAGAC
  801   ATACTCTAAG GATCACCGCT TTTTAGGGTG TCCTAAGAAA GAGGCTATTG CACTGCCACG TTCTATGTGC CTAAGCTGAC
  881   GGGACAGGCA TGTCGCCCTG AGTGTCCTCC AAACCTGAGC CTCCTGACCT CAGACTCTCC AGCCTTAGGC TCTTTAACCG
  961   TCTTATTCCC CCATCTCCAC AGCATGACCT AGTCTGACGT CAGGGCTCAC ATTAATTAAA GAGCTTTTTC TCCTGGTCTG
 1041   AGACAATGTA AAAAGCTCTC AGCCTGGGGG AGCATAGATG GCCCAGAGAT TAACAGCGTG TCTGAGTTCC GCTTCTGACC
 1121   TGAGCTCAGT TCCCAGCAGC CATACTGGGG AGCTCACAAC CACCTGGAGC TCCAGCTCCA GGAGATGCAT CGCCTCTGGG
 1201   CTCTGGAGGC TCGTGCACGC AGCTACACAC AGCTACACAG GCACATACAT TTCCTTCAAA AAACAAAAAC TGGACAAAAA
 1281   CTCTTGGCCA TACTGTCTCA CTCAGAAGAC AAGACGTCTC CTCTGGGTGA GGCAGGTCGC AGAGCTGGCA GTAGCTGCAT
 1361   GACTGGTGGT GTGGCGGGGT TGGTGGGGAC GGGGAGCTGG GAGCCTGCCC ACCCCACAGA CTCAGAAGAA GAGGCTACAG
 1441   GTTCATGCTC CTTGCTCTAC TGCGGTCTTG GGGTATGATG CACACATGTG GTTATGGTGC CCACAGTCTC CCAAGGCTGG
 1521   AGGACACGTA GAGTCTGGAG CTTTGACCAG TTGCTTGAAG GGACTTCTAG CCCATGAGTG ACAGCGAGGA AATCATGCGA
 1601   ACGTCTCAAG CTCCTGTAAT TGGCCTTGAG GTCCAGGCAC CTGGGGACTG GCTCTACCCC AAGAGACGCC TGACATGCAT
 1681   TCTTGCAATG GAGGCCAGAC TCTCTCTCTC TCTCTTCTCT GACAGGTGCT AAGGGACCAC TTCCAAAGCT GGGGAACCCC
 1761   AGGGAGGGGT CAGTGGCCAG ATACCCATG
```

B

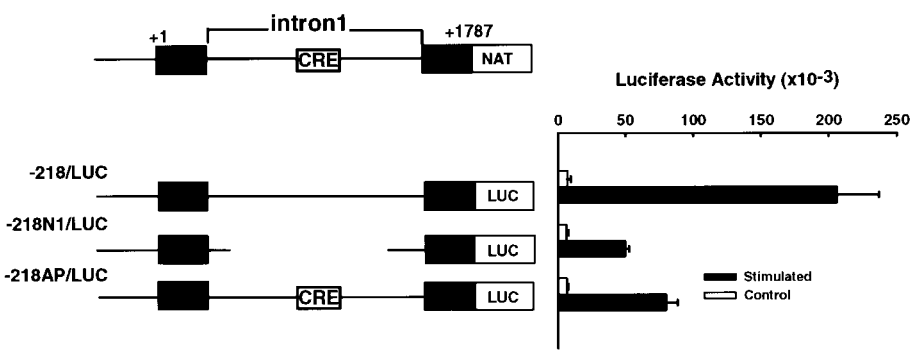

FIG. 1. The first intron can enhance AA-NAT promoter activity. **A:** Sequence analysis of the first 1,786 nucleotides of transcribed rat AA-NAT sequence. The 5′ untranslated region (boldface) results from splicing the 1,612-nucleotide-long intron 1 between positions 113 and 1,726. Shown is a partial result of a computer-assisted search for putative regulatory elements: CRE at position 995 (Roesler et al., 1988) and CRE-like at positions 925 and 1,116 are boxed; the putative PCE at position 1,617 (Kikuchi et al., 1993) is underlined; and the stretches that conform to the published PIRE/CRX (Li et al., 1998) core sequence are lined with asterisks. A 193-bp-long APP (positions +138 to +330; Katsuki et al., 1996) is double-underlined. Canonical donor and acceptor splice sites around the exon–intron junctions are in italics. The first methionine is underlined. **B:** AA-NAT promoter constructs driving the firefly luciferase reporter gene were transfected into primary rat pinealocytes as described. Twenty-four hours later, cultures were stimulated with Bt_2cAMP (1 m*M;* filled bars) or left untreated (open bars). Twenty-four hours later, luciferase activity was measured. Data were compiled from three independent experiments. Comparable results were obtained in 10 independent experiments. The deleterious effect of intron 1 (−218N1) or CRE (−218AP) deletion upon stimulated levels was statistically significant at the $p < 0.01$ level of confidence as monitored by a Student *t* test (Goulden, 1956). However, no significant difference was found between −218N1 and −218AP. The nucleotide sequence reported here has been submitted to the GenBank/EBI Data Bank as an addendum to GenBank accession no. U77455.

RESULTS

AA-NAT intron 1 dramatically enhances promoter activity

Computer-assisted analysis of the 1,612-bp intronic 5′ flanking region revealed several putative *cis*-acting regulatory elements (Fig. 1A). These include a 193-bp-long alternating purine–pyrimidine (APP) tract (Katsuki et al., 1996) between positions 138 and 331, a perfect CRE (Roesler et al., 1988) at position 995, two CRE-like sequences at positions 925 and 1,116, three putative pineal regulatory elements/cone–rod homeoboxes (PIRE/CRX: TAATT/C; Li et al., 1998) at positions 1,013, 1,014, and 1,088, and a fourth one embedded within a potential photoreceptor conserved element (PCE; Kikuchi et al., 1993), natPCE, at position 1,617. Splicing of the first intron generates a 174-nucleotide-long leader sequence (data not shown; Fig. 1A, bold letters).

The presence of potential control elements within the intronic region was investigated by assessing the pro-

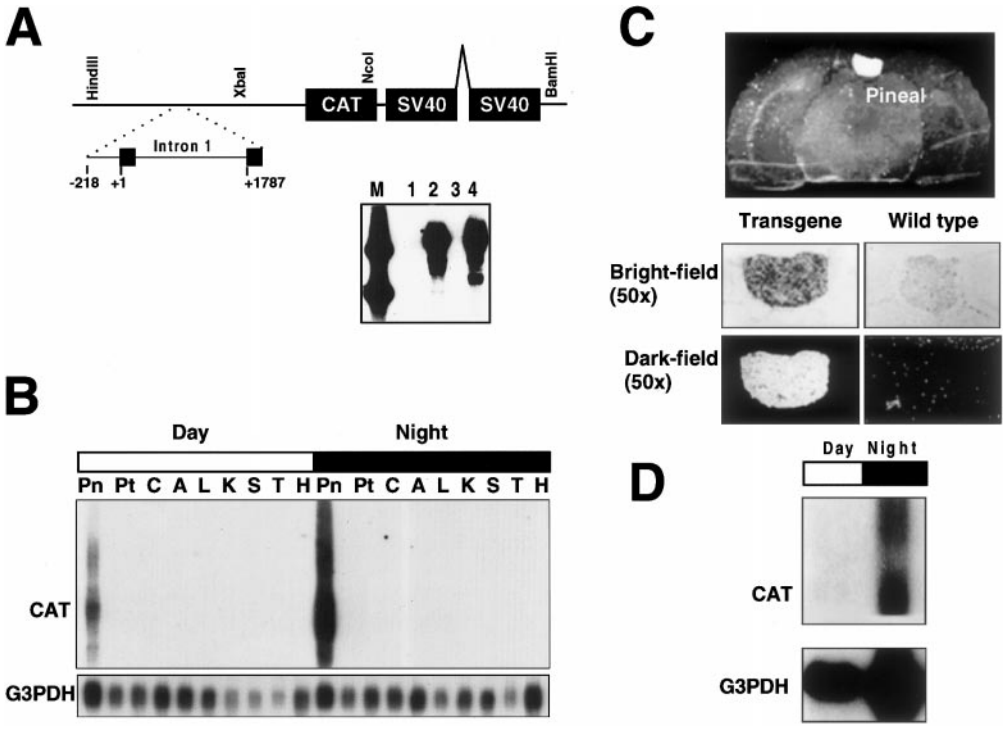

FIG. 2. Spatiotemporal pattern of −218-driven reporter gene expression in transgenic rats. **A:** The diagram (**top**) is a schematic representation of the *Hin*dIII to *Bam*HI DNA fragment used for microinjection into rat embryos. It consists of a 2,008-bp sequence derived from the rat AA-NAT 5′ flanking region, the bacterial CAT gene, and a discontiguous SV40-derived 3′ untranslated region. Also shown (**bottom**) is a Southern blot analysis of *Nco*I-digested genomic DNA isolated from three independent transgenic lines: AP2 (2 transgene copies; signal barely visible; lane 1), AP6 (~80 transgene copies; lane 2), and AP9 (~170 transgene copies; lane 4); a nontransgenic control animal is represented in lane 3. A transgenic DNA marker was loaded on lane M (see Materials and Methods). **B:** Northern blot analysis of CAT mRNA expression. AP6 transgenic animals were killed in the middle of the day or night, and total RNA was extracted from selected brain and peripheral tissues: Pn, pineal; Pt, pituitary; C, cortex; A, adrenal; L, liver; K, kidney; S, spleen; T, thymus; H, heart. Blots were probed sequentially with CAT and G3PDH probes; exposure time for the CAT signal was 42 h (a 17-day exposure failed to reveal detectable levels of extrapineal CAT expression). **C:** Localization of transgene expression by in situ hybridization histochemistry. Brains were harvested from transgenic rats (AP6) at 12 a.m., and 12-μm coronal sections at the level of the pineal gland were prepared and probed with a ^{35}S-labeled CAT-specific oligonucleotide. The autoradiograph (**top**) shows restricted CAT expression in the pineal gland (exposure time 17 days). Pretreatment of transgenic tissue sections with RNase A and T1 abolished the signal, which, together with the absence of signal in wild-type animals, confirms the specificity of our procedure. Also shown (**bottom**) is a section through the pineal gland of transgenic (AP6) and wild-type rats at higher magnification. **D:** Northern blot analysis of total RNA extracted from retinas harvested from the same transgenic animals killed in the middle of the day or night (exposure time 11 days).

moter activity of two luciferase reporter constructs referred to as −218/LUC and −218N1/LUC (see Materials and Methods). These were transfected into primary rat pinealocytes (Fig. 1B). Presence of the full intron 1 resulted in a fourfold enhancement ($p < 0.01$) of Bt_2cAMP-dependent promoter activity. As predicted, deletion of a 25-bp fragment encompassing the intronic CRE (in −218AP/LUC) was sufficient to abolish this effect, bringing promoter performance to a level that was statistically indistinguishable from that of −218N1/LUC. Thus, the sequence present in the minimal AA-NAT promoter (Baler et al., 1997) would appear not to be sufficient to drive maximal levels of reporter gene expression. The remarkably low level of basal activity together with its robust responsiveness to adrenergic stimulation suggested to us that the −218 construct might be a suitable vector for driving pineal-specific expression of a transgene in vivo.

The −218 promoter construct confers conditional tissue-specific reporter gene expression in vivo

We assessed the usefulness of the −218 AA-NAT promoter fragment as a gene-targeting device that would express genetic information in a pattern similar to that of AA-NAT. To do this, we used a −218-derived promoter construct driving expression of the bacterial CAT gene, which was delivered by microinjection into rat embryos.

Three transgenic lines were established (AP2, 6, and 9; Fig. 2A). Transgenic rats were then tested for tissue distribution and daily rhythmicity of the CAT mRNA signal (Fig. 2B–D). CAT transcripts were detected at high levels in the pineal gland (Fig. 2B; exposure time 2 days) and at much lower levels in the retina (Fig. 2D, exposure time 11 days). Expression was not detected in other tissues, either by northern blot (Fig. 2B, exposure time 2 weeks, not shown) or in situ hybridization (Fig. 2C) analysis. In both the pineal gland and the retina,

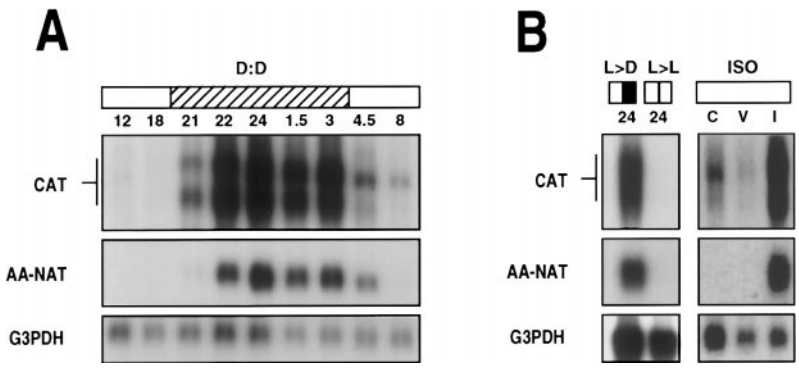

FIG. 3. Circadian, photic, and adrenergic regulation of expression of the transgene in a −218 AA-NAT rat transgenic line: northern blot analysis of total pineal RNA extracted from AP6 transgenic animals entrained to a 12:12 light/dark cycle. **A:** Circadian time course of induction of the transgene and endogenous transcripts after 3 days in constant darkness is shown. **B:** Animals were exposed to a 12:12 light/dark cycle and switched to constant light at night (L > L) or administered 1 mg/kg isoproterenol (I) or vehicle (V) or were not injected (C) in the middle of the day (12 p.m.) and 3 h before harvest. All blots in this figure were exposed sequentially to CAT, AA-NAT, and G3PDH probes. See Materials and Methods for details on housing and lighting.

CAT mRNA displayed a robust day/night rhythm of expression. The night pineal signal was ~50-fold higher than the night retina signal, which is consistent with the differential amplitude of the endogenous AA-NAT response in these tissues (Roseboom et al., 1996; Niki et al., 1998). All three transgenic lines exhibited a similar conditional tissue-specific pattern of expression, with the absolute level of expression being copy number dependent. These in vivo observations support the hypothesis that the sequence present in the −218 construct can confer the tissue distribution and day/night patterns of expression characteristic of the rat AA-NAT gene.

The fidelity with which the −218-driven CAT mRNA confers the regulation of the endogenous AA-NAT gene was assessed by northern blot analysis of total pineal RNA from transgenic animals exposed to treatments that influence AA-NAT gene expression. CAT and AA-NAT mRNAs displayed a virtually identical pattern of expression throughout the subjective night under constant darkness (Fig. 3A). In addition, neither mRNA increased when the onset of darkness was blocked (Fig. 3B, L > L) and both increased strongly following injection of the β-adrenergic agonist isoproterenol (Fig. 3B, I) during the day. These results indicate that the −218 and the endogenous AA-NAT promoters are functionally indistinguishable because (a) they exhibit identical circadian patterns of expression, (b) expression is blocked by light exposure during the dark phase, and (c) expression in the pineal gland is increased in response to β-adrenergic stimulation.

The importance of intron 1 sequences in determining the proper spatiotemporal distribution of AA-NAT gene activity was examined by analyzing the pattern of reporter gene expression in transgenic lines carrying the −218N1/CAT construct at different copy loads. Consistent with the results obtained through transient transfection of primary pinealocytes (Fig. 1B), this promoter was nearly inactive: CAT transcripts were not detected in any tissue or time according to northern blot analysis when examined in the high copy number line CP88 (Fig. 4A). However, using the more sensitive PCR-based approach, we were able to detect transgene expression and assess the effect of intron 1 removal upon AA-NAT promoter performance. Overall, the intron-less lines displayed dramatically reduced levels of CAT mRNA in the night pineal relative to the intron-containing lines (Fig. 4B, left, 5-min exposure). In contrast, cortical levels of the transgene at night were similar to those obtained with the full promoter (Fig. 4B, right, 90-min exposure).

DISCUSSION

Expression of the AA-NAT gene in the rat pineal gland is an especially useful model for transcriptional regulation studies because it exhibits distinct time-of-day and tissue-specific expression patterns (Roseboom et al., 1996; Baler et al., 1997). This system gains interest from

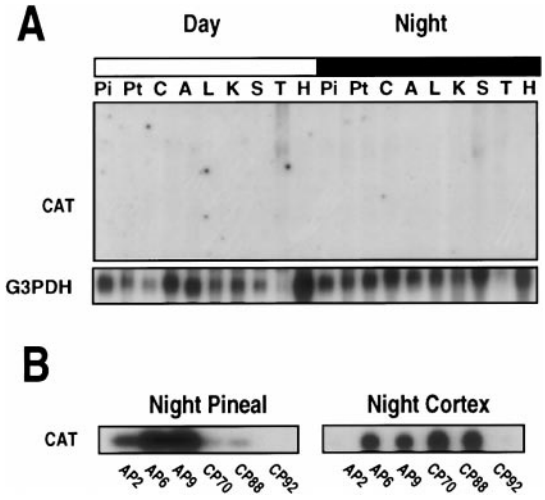

FIG. 4. First intron sequences are essential for high and regulated expression of the AA-NAT gene. **A:** Northern blot analysis of CAT mRNA expression. CP88 (−218N1/CAT, approximate copy number 75) transgenic animals were killed at midday (ZT 5) or midnight (ZT 17), and total RNA was extracted from selected brain and peripheral tissues: Pi, pineal; Pt, pituitary; C, cortex; A, adrenal; L, liver; K, kidney; S, spleen; T, thymus; H, heart. Blots were probed sequentially with CAT and G3PDH probes; exposure time for the CAT signal was 2 weeks. **B:** Southern blot analysis of the CAT signal after PCR amplification of night pineal (1 μl) or cortex (2 μl) cDNA prepared from all transgenic lines. Exposure times were 5 min (**left**) or 90 min (**right**).

the fact that it represents a well studied downstream output of the endogenous circadian pacemaker (Klein and Moore, 1979; Evered and Clark, 1985; Klein, 1985).

It is evident that the development of a DNA delivery system that could carry genetic information to the rat pineal tissue in a specific and timely fashion would significantly enhance our ability to analyze the molecular basis of pineal physiology. During the course of the present study, it was established that sequences downstream of the transcription start point can dramatically improve the stimulation index of the minimal AA-NAT promoter in pinealocytes. It was also found that sequences within the first intron are necessary for tissue and temporal control of a reporter gene in vivo. It should now be possible to identify these intronic elements to determine their mode of action.

It was previously known that a CRE-like sequence in the AA-NAT promoter region was essential to respond to adrenergic stimulation in vitro (Baler et al., 1997). However, our results point to a second, functional CRE, in the AA-NAT 5′ flanking region, whose presence appears to be critical to achieve full promoter potential. Thus, two CREs are present in the AA-NAT flanking region, which might cooperate to modulate AA-NAT gene expression. The discovery of an additional target for the cAMP signal transduction cascade in the AA-NAT promoter adds a new layer of complexity to the mechanisms controlling rhythmic expression of the AA-NAT gene, in which amplitude modulation is thought to involve an immediate cAMP early repressor (ICER; Stehle et al., 1993; Foulkes et al., 1996). This model was based upon the ability of overexpressed ICER to suppress the minimal rat AA-NAT promoter through the upstream (imperfect) natCRE (Foulkes et al., 1996). It would now be important to assess the ability of ICER to modulate the intronic (perfect) CRE, as differences in the binding affinity of ICER toward different CRE sites are apparent (Molina et al., 1993; Foulkes et al., 1996). This is particularly pressing given the fact that the bulk of the response appears to be dependent upon the intronic CRE.

Tissue-specific AA-NAT expression

It has been recently postulated that several copies of the PIRE/CRX sequence in the upstream minimal AA-NAT promoter region could play a critical role in defining the tissue distribution of AA-NAT gene expression (Li et al., 1998). However, this is not supported by our findings that the −218N1/CAT construct reported here (which contains seven of these PIRE sequences) failed to generate a pineal-specific pattern of gene expression and was able to drive high levels of reporter gene expression in several nonpineal cell systems in vitro (unpublished results). Thus, there is no evidence available to indicate that PIRE/CRX sequences by themselves control tissue-specific expression. However, it is possible that they contribute in the context of a larger promoter.

In contrast, the results of the in vitro (transient transfections) and in vivo (rat transgenic) studies described here support the proposal that the critical information that drives pineal/retinal-specific expression of a reporter gene is contained within a promoter fragment that encompasses the intron 1 of the rat AA-NAT promoter. This is evident from the findings that the circadian patterns of regulation of endogenous AA-NAT and exogenous −218-driven CAT genes are virtually indistinguishable, that they display equally robust responses following injection of the adrenergic agonist isoproterenol, and that they are both blocked if the onset of darkness is prevented. Importantly, the −218 promoter fragment can also drive gene expression in the retina. The dramatically lower levels of CAT mRNA detected in this tissue likely reflect the conditions that determine the intrinsically lower levels of retinal AA-NAT expression and the heterogeneous nature of the retina. As melatonin production in the eye is confined to the photoreceptor cell layer (Niki et al., 1998), our measurement of both AA-NAT and CAT mRNA levels in total retinal mRNA represents an underestimate of expression in these specific cells.

The simplest strategies to achieve such a remarkable restriction in tissue distribution would invoke a pineal/retina-specific activator, a ubiquitous repressor (not expressed in pineal gland or retina), or some combination of the two. The challenge now is to distinguish between these alternatives. Based on our results, it seems reasonable to propose that some combination of the two is operating in the case of the AA-NAT promoter. It is possible that tissue-specific factors are at play during the scotophase. In this context, the intronic CRE, which could cooperate with tissue-specific coactivators, appears to play a major role in driving maximal levels of promoter activity upon stimulation; the multiple intronic PIREs and the downstream intronic PCE are all good candidate sites that will be further investigated for tissue-specific recognition patterns and effects.

It is worth noting, on the other hand, that a low but significant basal level of promoter activity can be detected in the pineal during the day. This diurnal expression is expected to be very low because the gland is unstimulated and the cAMP system should be turned off. In view of this, it is of special interest that basal levels of transgene expression are difficult to detect in any other tissues (Fig. 2B). It seems reasonable to propose that a silencing mechanism, operating outside the pineal gland and retina to suppress expression, could underlie the purported inability of the intron-less −218 construct to differentiate between pineal and cortex environments (Fig. 4B).

A less attractive explanation is that intron 1 could influence AA-NAT expression through a splicing-related mechanism, perhaps through exon-spanning interactions. It is conceivable, for example, that elements such as the polypyrimidine tracts at the 3′ end and in the center of intron 1 could repress the utilization of a nearby branching point in tissues that are rich in polypyrimidine tract binding proteins; this type of mechanism was reported for other mRNAs subject to neuron-specific splicing regulation (Ashiya and Grabowski, 1997; Chan and

Black, 1997). This and similar interpretations are unlikely because alternative or unprocessed transcripts were not detected by PCR in several nonpineal tissues obtained from either normal or Bt_2cAMP-treated rats (P. Roseboom, personal communication) or from the transgenic rats established during this study.

Final comments

The findings reported here will influence future research in two ways. First, they will lead to the systematic dissection of the molecular basis of AA-NAT tissue distribution. Scrutiny of the elements responsible for restricting AA-NAT expression to the retinopineal axis should provide a powerful insight into the strategies that evolved to ensure proper spatial control of gene expression. Second, the tissue-specific promoter reported here will be an extremely useful vehicle with which to target the expression of genes and antisense RNAs into pinealocytes and melatonin-producing cells of the retina in the rat using transgenic strategies.

REFERENCES

Ang H. L., Carter D. A., and Murphy D. (1993) Neuron-specific expression and physiological regulation of bovine vasopressin transgenes in mice. *EMBO J.* **12,** 2397–2409.

Ashiya M. and Grabowski P. J. (1997) A neuron-specific splicing switch mediated by an array of pre-mRNA repressor sites: evidence of a regulatory role for the polypyrimidine tract binding protein and a brain-specific PTB counterpart. *RNA* **3,** 996–1015.

Baler R., Covington S., and Klein D. C. (1997) The rat arylalkylamine *N*-acetyltransferase gene promoter: cAMP activation via cAMP responsive element-CCAAT complex. *J. Biol. Chem.* **272,** 6979–6985.

Borjigin J., Wang M. M., and Snyder S. H. (1995) Diurnal variation in mRNA encoding serotonin *N*-acetyltransferase in pineal gland. *Nature* **378,** 783–785.

Chan R. C. and Black D. L. (1997) The polypyrimidine tract binding protein binds upstream of neural cell-specific c-src exon N1 to repress the splicing of the intron downstream. *Mol. Cell. Biol.* **17,** 4667–4676.

Coon S., Roseboom P. H., Baler R., Weller J. L., Namboodiri M. A. A., Koonin E. V., and Klein D. C. (1995) Pineal serotonin *N*-acetyltransferase: expression cloning and molecular analysis. *Science* **270,** 1681–1683.

Dukas K., Sarfati P., Vayesse N., and Pradayrol L. (1993) Quantitation of changes in the expression of multiple genes by simultaneous polymerase chain reaction. *Anal. Biochem.* **215,** 66–72.

Evered D. and Clark C., eds (1985) *Ciba Foundation Symposium, Vol. 117: Photoperiodism, Melatonin and the Pineal.* Pitman, London.

Foulkes S., Borjigin J., Snyder S. H., and Sassone-Corsi P. (1996) Transcriptional control of circadian hormone synthesis via CREM feedback loop. *Proc. Natl. Acad. Sci. USA* **93,** 14140–14145.

Goulden C. H. (1956) *Methods of Statistical Analysis,* 2nd edit. pp. 50–55. Wiley, New York.

Katsuki S., Kato J., Nakajima M., Inui N., Sasaki K., Kohgo Y., and Niitsu Y. (1996) Analysis of CA repeats in first intron of class I ADH gene in Long–Evans Cinnamon rats developing fatal intoxication after ethanol intake. *Alcohol. Clin. Exp. Res.* **20,** 33A–35A.

Kikuchi T., Raju K., Breitman M. L., and Shinohara T. (1993) The proximal promoter of the mouse arrestin directs gene expression in photoreceptor cells and contains an evolutionarily conserved retinal factor-binding site. *Mol. Cell. Biol.* **13,** 4400–4408.

Klein D. C. (1985) Photoneural regulation of the mammalian pineal gland, in *Ciba Foundation Symposium, Vol. 117: Photoperiodism, Melatonin and the Pineal* (Evered D. and Clark C., eds), pp. 38–56. Pitman, London.

Klein D. C. and Moore R. Y. (1979) Pineal *N*-acetyltransferase and hydroxyindole-*O*-methyltransferase: control by the retinohypothalamic tract and the suprachiasmatic nucleus. *Brain Res.* **174,** 245–262.

Knuchel M., Bednarik D. P., Chikkala N., Villinger F., Folks T. M., and Ansari A. A. (1994) Development of a novel quantitative assay for the measurement of chloramphenicol acetyl transferase (CAT) mRNA. *J. Virol. Methods* **48,** 325–338.

Li X., Chen S., Wang Q., Zack D., Snyder S., and Borjigin J. (1998) A pineal regulatory element (PIRE) mediates transactivation by the pineal/retina-specific transcription factor CRX. *Proc. Natl. Acad. Sci. USA* **95,** 1876–1881.

Molina C., Foulkes N., Lalli E., and Sassone-Corsi P. (1993) Inducibility and negative autoregulation of CREM: an alternative promoter directs the expression of ICER, and early response repressor. *Cell* **75,** 875–886.

Murphy D. and Carter D. A. (1993) *Methods in Molecular Biology, Vol. 18: Transgenesis Techniques: Principles and Protocols.* Humana Press, Totowa, New Jersey.

Niki T., Hamada T., Ohtomi M., Sakamoto K., Suzuki S., Kako K., Hosoya Y., Horikawa K., and Ishida N. (1998) The localization of the site of arylalkylamine *N*-acetyltransferase circadian expression in the photoreceptor cells of mammalian retina. *Biochem. Biophys. Res. Commun.* **248,** 115–120.

Parfitt A., Weller J. L., and Klein D. C. (1976) β-Adrenergic-blockers decrease adrenergically stimulated *N*-acetyltransferase activity in pineal glands in organ culture. *Neuropharmacology* **15,** 353–358.

Roesler W. J., Vandenbark G. R., and Hanson R. W. (1988) Identification of multiple protein binding domains in the promoter-regulatory region of the phosphoenolpyruvate carboxykinase (GTP) gene. *J. Biol. Chem.* **263,** 9063–9066.

Roseboom P. H. and Klein D. C. (1995) Norepinephrine stimulation of pineal CREB phosphorylation: primary role of a β-adrenergic $\rightarrow$ cyclic AMP mechanism. *Mol. Pharmacol.* **47,** 439–449.

Roseboom P. H., Coon S. L., Baler R., McCune S. K., Weller J. L., and Klein D. C. (1996) Melatonin synthesis: regulation of rat pineal serotonin *N*-acetyltransferase mRNA. *Endocrinology* **137,** 3033–3044.

Stehle J. H., Foulkes N. S., Molina C. A., Simonneaux V., Pevet P., and Sassone-Corsi P. (1993) Adrenergic signals direct rhythmic expression of transcriptional repressor CREM in the pineal gland. *Nature* **365,** 314–320.

Sugden A. L., Sugden D., and Klein D. (1986) Essential role of calcium influx in the adrenergic regulation of cAMP and cGMP in rat pinealocytes. *J. Biol. Chem.* **261,** 11608–11612.

Sugden L. A., Sugden D., and Klein D. C. (1987) α_1-Adrenoceptor activation elevates cytosolic calcium in rat pinealocytes by increasing net influx. *J. Biol. Chem.* **262,** 741–745.

Vanecek J., Sugden D., Weller J. L., and Klein D. (1985) Atypical synergistic α1- and β-adrenergic regulation of adenosine 3′,5′-monophosphate and guanosine 3′,5′-monophosphate in rat pinealocytes. *Endocrinology* **116,** 2167–2173.

Yoshimura K., Rosenfeld M. A., Seth P., and Crystal R. G. (1993) Adenovirus-mediated augmentation of cell transfection with unmodified plasmid vectors. *J. Biol. Chem.* **268,** 2300–2303.